UNIT 05 - Introduction to Mechanical Engineering, Introduction to Machining, Machinability, The Turning Process, Lathes and Lathe Operations: Lathe Components, Lathe Operations, Types of Lathes, Drilling, Drills, and Drilling Machines, Milling, Milling cutters, Types of Milling Machine, Introduction to casting process, Design basics, Factor of safety, Engineering materials – types and applications.

Mechanical Engineering is amongst the broadest and oldest fields of engineering, that deals with the design and usage of machines. A Mechanical Engineering degree allows the students to get the necessary knowledge and understanding regarding the working of heavy tools and machinery. All the manufacturing facilities require mechanical engineers for their smooth functioning. A mechanical engineer has to work on the design and control of a system used in the process of manufacturing a product and machinery in a broader sense.

Production system is the system that converts raw material or scrap to useful product by adding substantial value. This system is usually a close loop that starts with market survey & forecasting and ends with feedback collection & its analysis.

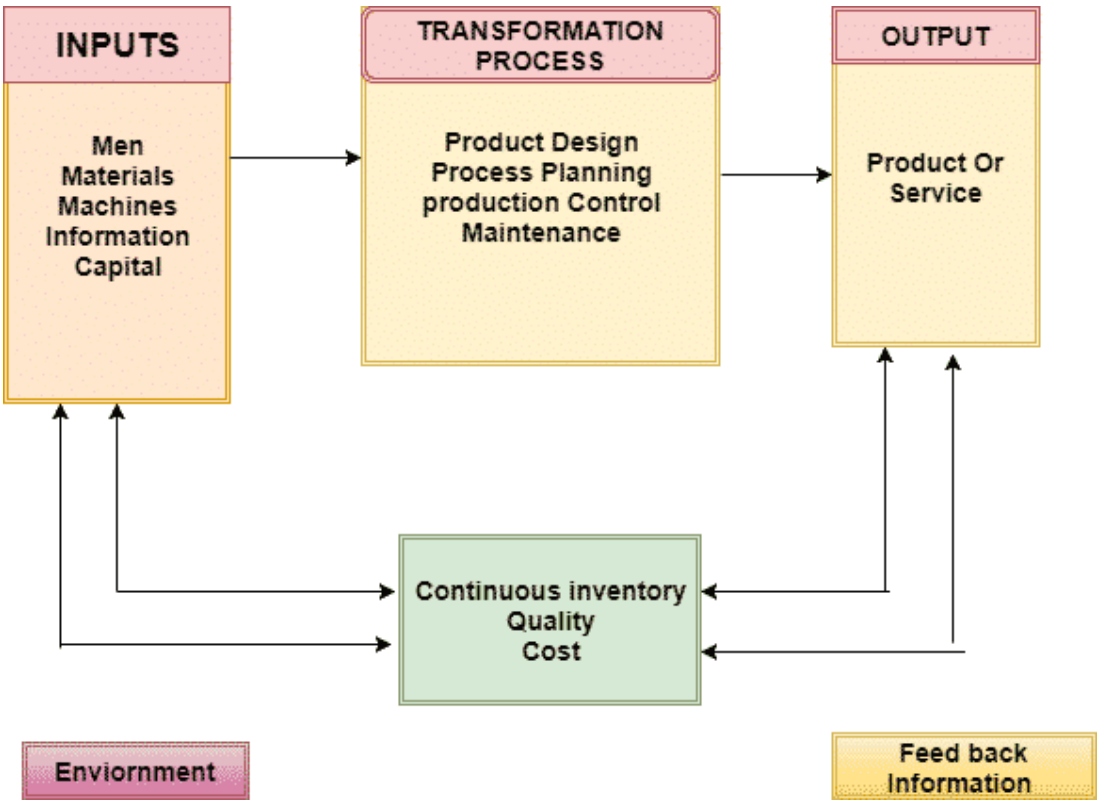

Production system utilizes tangible (such as man, machine, material and money) as well as intangible (such as management planning, forecasted data, legal restrictions, government opportunities, etc.) resources. Various elements and steps that a production system usually consists of are enlisted below.

- Market survey
- Forecasting
- Planning and sequencing
- Purchasing
- Conversion or manufacturing
- Storing and maintaining
- Inspection and Quality control
- Packaging and delivery
- Feedback collection and analysis.

Manufacturing is basically a subset or part of production. It basically refers to a group of processes that actually convert raw material or scrap to useful product as per requirement. Although it directly takes only tangible types of input (such as man, machine, material and money), indirectly it takes help of various decisive parameters regarding planning and sequencing. The term manufacturing indicates a cluster of processes that includes casting, forming, joining, powder metallurgy, etc.

Machining is one of the secondary manufacturing processes by which excess material is removed (by shearing) from a preformed blank in the form of small sharp chips using a wedge shaped cutting tool in order to get product having desired shape, size and tolerance. For example, turning, drilling, facing, slotting, milling, etc. are various machining operations.

Machining is a material removal process in which a sharp cutting tool is used to mechanically cut away material so that the desired part geometry remains. Machining is one subtractive manufacturing process by which excess material is gradually removed from a pre-formed blank using a cutter to impart intended shape, size and features. Primary purpose of machining is to improve dimensional accuracy and tolerance level by removing layer by layer material from one basic workpiece. Machining process encompasses several operations that actually perform intended task.

Production	Manufacturing	Machining
A system	A step	A process
It comprises all relevant fields of the fabrication process	It actually converts raw material or scrap into desired product	It removes material from job to give intended shape and size
Involves following steps: Forecasting, management, designing, purchasing, scheduling, manufacturing, maintenance, inspection, quality control, packaging, sales, customer service, etc.	Involves following processes: Casting and molding, forming, joining, machining, heat treatment, coating and coloring, rapid prototyping, powder metallurgy, etc.	Involves following operations: Turning, threading, tapping, facing, grooving, knurling, drilling, milling, shaping, planning, boring, broaching, grinding, lapping, buffing, AJM, USM, EDM, etc.

Production ⊇ Manufacturing ⊇ Machining

Machining to high accuracy and finish essentially enables a product:

- Fulfill its functional requirements
- Improve its performance
- Prolong its service

Principle of Machining :

A metal rod of irregular shape, size and surface is converted into a finished rod of desired dimension and surface by machining by proper relative motions of the tool-work pair.

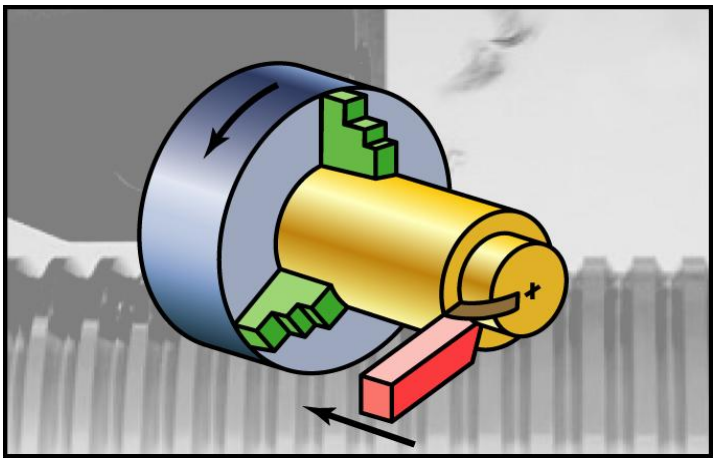

The essential basic requirements for machining

The blank and the cutting tool are properly mounted (in fixtures) and moved in a powerful device called machine tool enabling gradual removal of layer of material from the work surface resulting in its desired dimensions and surface finish. Additionally some environment called cutting fluid is generally used to ease machining by cooling and lubrication.

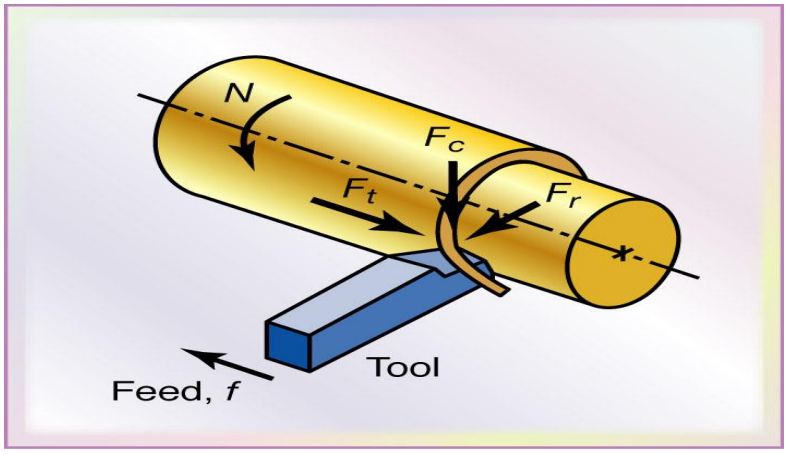

Machinability is expressed as "operational characteristics of the work-tool combination". A material is said to be more machinable if it results in lesser tool wear, greater tool life and provide better surface finish consuming lesser power.

Attempts were made to measure or quantify machinability and it was done mostly in terms of :

- **Tool life** which substantially influences productivity and economy in machining
- **Magnitude of cutting forces** which affects power consumption and dimensional accuracy
- **Surface finish** which plays role on performance and service life of the product. Often cutting temperature and chip form are also considered for assessing machinability.

Machinability is referred to :

• The ability of the work material to be machined,
• How easily and fast a material can be machined, and
• Material response to machining.

The essential elements / components of machining :

The basic elements of machining are **the workpiece, the tool, and the chip**. The reason is that relative motion between the tool and workpiece is mandatory for any cutting action, and the chip formation is a bye product of this motion.

For any cutting action, it is necessary to have relative motion between tool and workpiece. Unwanted material is removed from workpiece by the cutting action of the tool.

The Machining parameters:

1. **Cutting Speed**
2. **Feed**
3. **Depth of Cut**

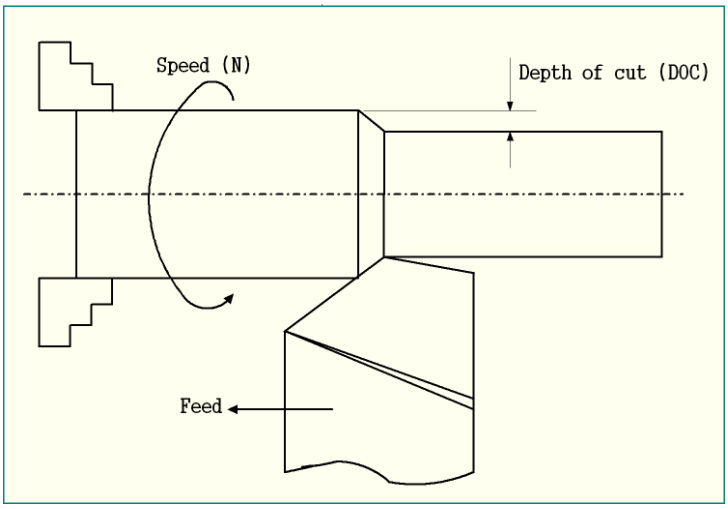

Cutting Speed - Rate at which point on work circumference travels past cutting tool. Always expressed in feet per minute (ft/min) or meters per minute (m/min).

Feed - Distance cutting tool advances along length of work for every revolution of the spindle.

Depth of Cut - Depth of chip taken by cutting tool and one-half total amount removed from workpiece in one cut.

Machine Tools basically produce geometrical surfaces like flat, cylindrical or any contour on the preformed blanks by machining work with the help of cutting tools.

The physical functions of a Machine Tool in machining are:

• firmly holding the blank and the tool

• transmit motions to the tool and the blank

• provide power to the tool-work pair for the machining action.

• control of the machining parameters, i.e., speed, feed and depth of cut.

Lathe is a machine tool on which surfaces of revolution can be produced. On the lathe basically have provision for holding the work piece rigidly and securely so that it does not slip because heavy forces are going to occur during cutting of metals.

The primary task of a lathe is to generate cylindrical workpieces. The process of machining a workpiece to the required shape and size by moving the cutting tool either parallel or perpendicular to the axis of rotation of the workpiece is known as turning. In this process, excess unwanted metal is removed. The machine tool useful in performing plain turning, taper turning, thread cutting, chamfering and knurling by adopting the above method is known as lathe.

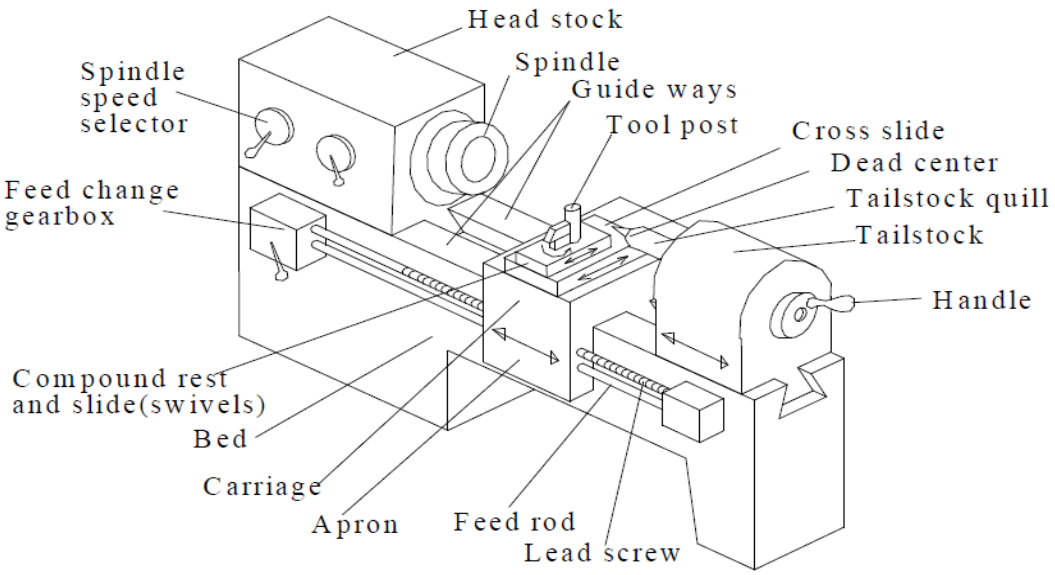

Main parts of a lathe :

Bed – Headstock – Spindle – Tailstock - Feed mechanism - Lead screw - Feed rod and Carriage. Carriage consist of Saddle – Apron - Cross-slide - Compound rest - Compound slide and Tool post

Bed is mounted on the legs of the lathe which are bolted to the floor. It forms the base of the machine. It is made of cast iron and its top surface is machined accurately and precisely. Headstock of the lathe is located at the extreme left of the bed and the tailstock at the right extreme. Carriage is positioned in between the headstock and tailstock and slides on the bed guide ways.

Headstock is mounted permanently on the inner guide ways at the left hand side of the leg bed. The headstock houses a hollow spindle and the mechanism for driving the

spindle at multiple speeds. The headstock will have any of the following arrangements for driving and altering the spindle speeds: (i) Stepped cone pulley drive (ii) Back gear drive (iii) All gear drive

The spindle rotates on two large bearings housed on the headstock casting. A hole extends through the spindle so that a long bar stock may be passed through the hole. The front end of the spindle is threaded on which chucks, faceplate, driving plate and catch plate are screwed.

Tailstock is located on the inner guide ways at the right side of the bed opposite to the headstock. The body of the tailstock is bored and houses the tailstock spindle. The spindle moves front and back inside the hole. The spindle has a taper hole to receive the dead centre or shanks of tools like drill or reamer.

Carriage is located between the headstock and tailstock on the lathe bed guide ways. It can be moved along the bed either towards or away from the headstock. It has several parts to support, move and control the cutting tool.

The parts of the carriage are: a) saddle b) apron c) cross-slide d) compound rest e) compound slide f) tool post

Saddle is an "H" shaped casting. It connects the pair of bed guide ways like a bridge. It fits over the bed and slides along the bed between headstock and tailstock.

Cross-slide is situated on the saddle and slides on the dovetail guide ways at right angles to the bed guide ways. It carries compound rest, compound slide and tool post.

Compound rest is a part which connects cross slide and compound slide. It is mounted on the crossslide by tongue and groove joint. It has a circular base on which angular graduations are marked. The compound rest can be swivelled to the required angle while turning tapers.

Tool post is located on top of the compound slide. It is used to hold the tools rigidly. Tools are selected according to the type of operation and mounted on the tool post and adjusted to a convenient working position.

The leadscrew is a long threaded shaft used as master screw. It is brought into operation during thread cutting to move the carriage to a calculated distance. Mostly leadscrew are Acme threaded.

Feed rod is placed parallel to the leadscrew on the front side of the bed. It is a long shaft which has a keyway along its length. The power is transmitted from the spindle to the feed rod through tumbler gears and a gear train.

Types of lathe - Various designs and constructions of lathe have been developed to suit different machining conditions and usage. The following are the different types of lathe:

1. Speed lathe
2. Centre or engine lathe
3. Bench lathe
4. Tool room lathe
5. Capstan and Turret 1athe
6. Automatic lathe
7. Special purpose lathe

Centre Lathe or Engine Lathe - The term "engine" is associated with this lathe due to the fact that in the very early days of its development it was driven by steam engine. This lathe is the important member of the lathe family and is the most widely used. Similar to the speed lathe, the engine lathe has all the basic parts, e.g., bed, headstock, and tailstock. But its headstock is much more robust in construction and contains additional mechanism for driving the lathe spindle at multiple speeds.

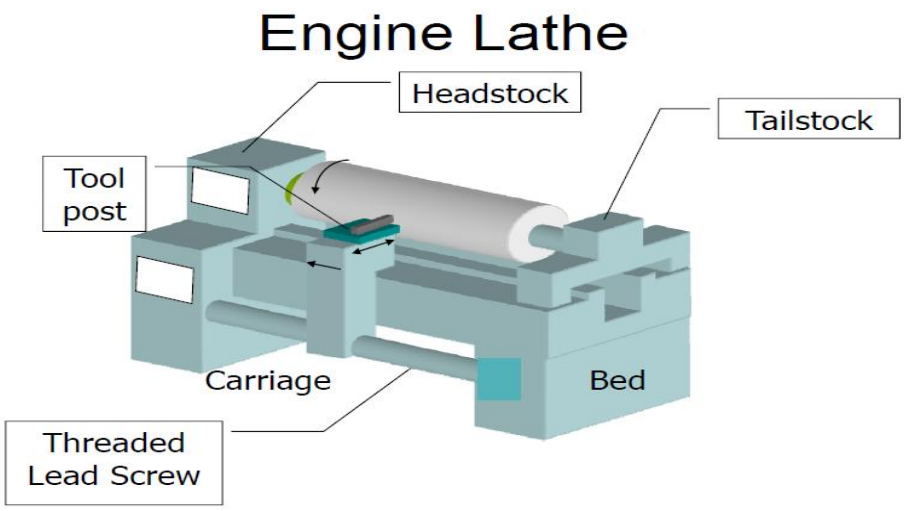

Speed lathe is simplest of all types of lathes in construction and operation. The important parts of speed lathe are following- (1) Bed (2) Headstock (3) Tailstock, and (4) Tool post mounted on an adjustable slide.

It has no feed box, 1eadscrew or conventional type of carriage. The tool is mounted on the adjustable slide and is fed into the work by hand contro1. The speed lathe finds applications where cutting force is least such as in wood working, spinning, centering, polishing, winding, buffing etc. This lathe has been so named because of the very high speed of the headstock spindle.

Bench Lathe is a small lathe usually mounted on a bench. It has practically all the parts of an engine lathe or speed lathe and it performs almost all the operations. This is used for small and precision work.

Capstan and Turret lathes - The development of these lathes results from the technological advancement of the engine lathe and these are vastly used for mass production work. The distinguishing feature of this type of lathe is that the tailstock of an engine lathe is replaced by a hexagonal turret, on the face of which multiple tools may be fitted and fed into the work in proper sequence. Due to this arrangement, several different types of operations can be done on a job without re-setting of work or tools, and a number of identical parts can be produced in the minimum time.

Automatic Lathes are so designed that all the working and job handling movements of the complete manufacturing process for a job are done automatically. These are high speed, heavy duty, mass production lathes with complete automatic control.

Special Purpose Lathes are constructed for special purposes and for jobs, which cannot be accommodated or conveniently machined on a standard lathe. The wheel lathe is made for finishing the journals and turning the tread on railroad car and locomotive wheels. The gap bed lathe, in which a section of the bed adjacent to the headstock is removable, is used to swing extra-large-diameter pieces.

Drilling Machine

Drilling machine is one of the most important machine tools in a workshop. It was designed to produce a cylindrical hole of required diameter and depth on metal workpieces. Though holes can be made by different machine tools in a shop, drilling machine is designed specifically to perform the operation of drilling and similar operations. Drilling can be done easily at a low cost in a shorter period of time in a drilling machine.

Drilling can be called as the operation of producing a cylindrical hole of required diameter and depth by removing metal by the rotating edges of a drill. The cutting tool known as drill is fitted into the spindle of the drilling machine. A mark of indentation is made at the required location with a centre punch. The rotating drill is pressed at the location and is fed into the work. The hole can be made upto a required depth.

The different types of drilling machines are:

1. Portable drilling machine (or) Hand drilling machine
2. Sensitive drilling machine (or) Bench drilling machine
3. Upright drilling machine
4. Radial drilling machine
5. Gang drilling machine
6. Multiple spindle drilling machine
7. Deep hole drilling machine

Portable drilling machine can be carried and used anywhere in the workshop. It is used for drilling holes on workpieces in any position, which is not possible in a standard drilling machine. The entire drilling mechanism is compact and small in size and so can be carried anywhere. This type of machine is widely adapted for automobile built-up work.

Sensitive drilling machine

It is designed for drilling small holes at high speeds in light jobs. High speed and hand feed are necessary for drilling small holes. The base of the machine is mounted either on a bench or on the floor by means of bolts and nuts. It can handle drills upto 15.5mm of diameter. The drill is fed into the work purely by hand. The operator can sense the progress of the drill into the work because of hand feed. The machine is named so because of this reason. A sensitive drilling machine consists of a base, column, table, spindle, drill head and the driving mechanism.

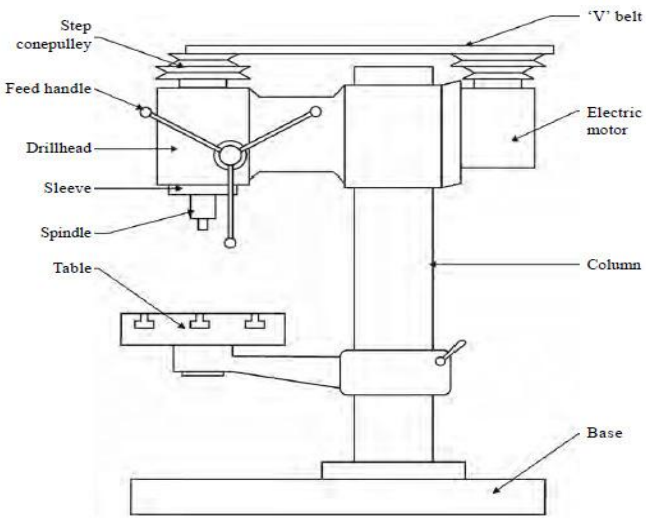

Fig 2.1 Sensitive drilling machine

Base - The base is made of cast iron and so can withstand vibrations. It may be mounted on a bench or on the floor. It supports all the other parts of the machine on it.

Column - The column stands vertically on the base at one end. It supports the work table and the drill head. The drill head has drill spindle and the driving motor on either side of the column.

Table - The table is mounted on the vertical column and can be adjusted up and down on it. The table has 'T'-slots on it for holding the workpieces or to hold any other work holding device. be adjusted vertically to accommodate workpieces of different heights and can be clamped at the required position.

Drill head - Drill head is mounted on the top side of the column. The drill spindle and the driving motor are connected by means of a V-belt and cone pulleys. The motion is transmitted to the spindle from the motor by the belt.

The radial drilling machine is intended for drilling on medium to large and heavy workpieces. It has a heavy round column mounted on a large base. The column supports a radial arm, which can be raised or lowered to enable the table to accommodate workpieces of different heights. The arm, which has the drill head on it, can be swung around to any position. The drill head can be made to slide on the radial arm. The machine is named so because of this reason. It consists of parts like base, column, radial arm, drill head and driving mechanism.

Though drilling is the primary operation performed in a drilling machine, a number of similar operations are also performed on holes using different tools. The different operations that can be performed in a drilling machine are:

1. Drilling
2. Reaming
3. Boring
4. Counter boring
5. Countersinking
6. Spot facing
7. Tapping
8. Trepanning

Reaming operation is usually meant to slightly increase the size and to provide a better tolerance, surface finish and improved shape of an initially drilled hole. The tool is called reamer. This is the operation of sizing and finishing a hole already made by a drill. Reaming is performed by means of a cutting tool called reamer.

Boring operation is enlarging a hole by means of adjustable cutting tools with only one cutting edge is accomplished. A boring tool is employed for this purpose. To enlarge a hole by means of an adjustable cutting tool. This is done when a suitable sized drill is not available or the hole diameter is so large that is cannot be ordinarily drilled.

Tapping is the operation of cutting internal threads by using a tool called a tap. A tap is similar to a bolt with accurate threads cut on it. To perform the tapping operation, a tap is screwed into the hole by hand or by machine.

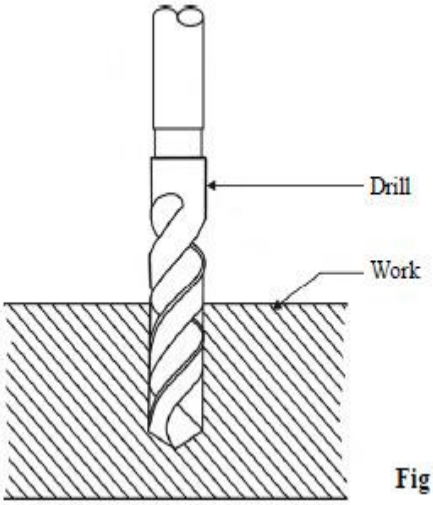

Fig 2.17 Drilling

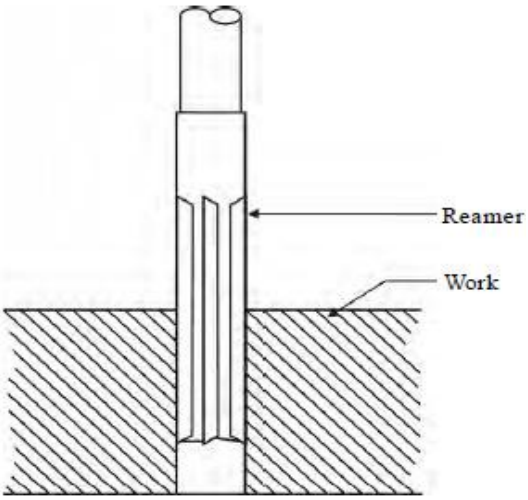

Fig 2.18 Reaming

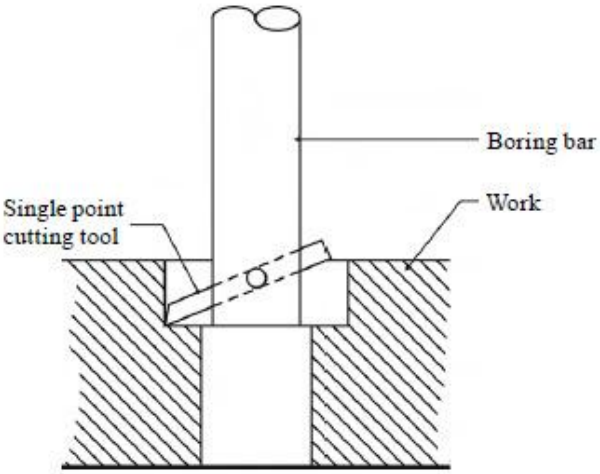

Fig 2.19 Boring

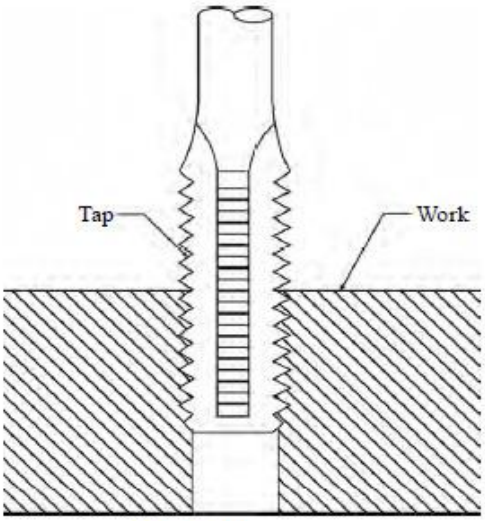

Fig 2.23 Tapping

A milling machine is a machine tool that cuts metal as the workpiece is fed against a rotating multipoint cutter. The milling cutter rotates at a very high speed because of the multiple cutting edges, it cuts the metal at a very fast rate. This machine can also hold single or multiple cutters at the same time.

Through milling process flat and complex shapes are formed by using multipoint cutting tool. The axis of rotation of cutting tool is perpendicular to the direction of feed. During each revolution of cutting operation the teeth of milling cutter enter and exit the work piece. Therefore on every rotation the teeth are subjected to impact force and thermal shock.The tool material and geometry must be designed to resist the conditions.

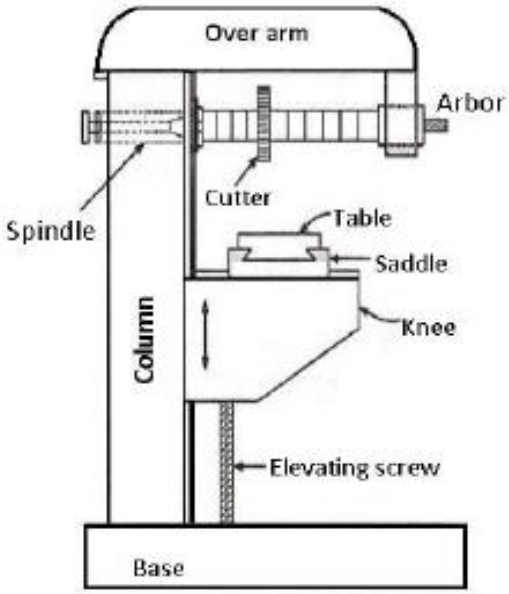

Types of Milling Machine

To satisfy the variety of requirement, milling machine comes in a number of ways, sizes and varieties.

1. Knee and column type
2. Horizontal
3. Vertical
4. Universal
5. Turret type

Casting - Metal casting (or simply casting) it based on the property of liquid to take up the shape of the vessel which contains it. The process of metal casting involves pouring of molten metal into a mould, which is a cavity formed in some moulding material such as sand. The mould cavity exactly resembles in shape and size with the product to be made. After pouring, the molten metal is allowed to freeze there, taking up the shape of the mould cavity and the product is thus cast, is called a **casting**.

The whole process of producing casting may be classified in to five steps as follows

(i) **Pattern making** The pattern is an exact fascimile or replica of the article to be cast. The patterns are designed and prepared as per the drawing.

(ii) **Moulding and core making** The moulds are prepared in either sand or similar materials with the help of patterns so that a cavity of the designed shape is produced. To obtain hollow portions, cores are prepared separately in core boxes. The moulds and cores are then baked to impart strength and finally assembled for pouring.

(iii) **Melting & casting** Correct composition of molten metal is melted in a suitable surface and poured into the moulds. The moulds are then allowed to cooldown for the metal to solidify. The castings are finally extracted by breaking the moulds.

(iv) **Fettling** The castings as obtained after solidification carry unwanted projections. Also sand particles tend to adhere to the surface of castings. The castings are therefore sent to fettling section when the projections are cut off and surface cleaned for further work.

(v) **Testing & Inspection** Finally, before the casting is despatched from foundry, it is tested and inspected to ensure that it is flawless and confirms to the specifications desired.

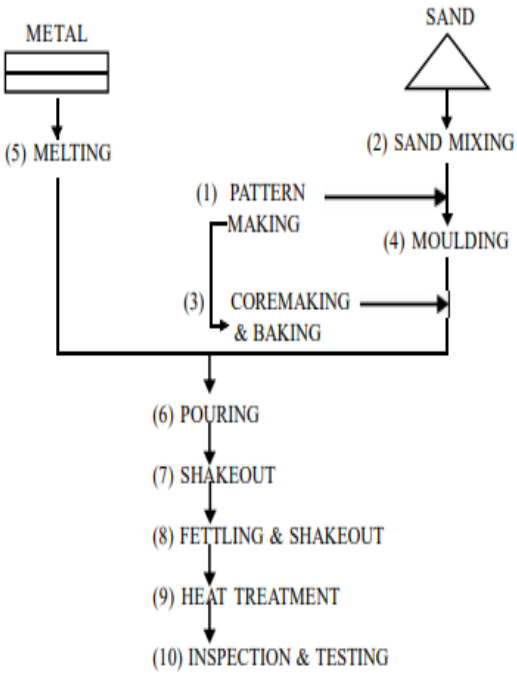

Classifications of Machine Design

1. **Adaptive design:** In most cases, the designer's work is concerned with adaptation of existing designs. The designer only makes minor alternation or modification in the existing designs of the product.

2. **Development design:** This type of design needs considerable scientific training and design ability in order to modify the existing designs into a new idea by adopting a new material or different method of manufacture.

3. **New design:** This type of design needs lot of research, technical ability and creative thinking. Only those designers who have personal qualities of a sufficiently high order can take up the work of a new design.

General Considerations in Machine Design

1. **Type of load and stresses caused by the load:** The load, on a machine component, may act in several ways due to which the internal stresses are set up.

2. **Motion of the parts or kinematics of the machine**: The successful operation of any machine depends largely upon the simplest arrangement of the parts which will give the motion required.

3. **Selection of materials:** It is essential that a designer should have a thorough knowledge of the properties of the materials and their behaviour under working conditions.

4. **Form and size of the parts:** The form and size are based on judgment.

5. **Frictional resistance and lubrication:** There is always a loss of power due to frictional resistance and it should be noted that the friction of starting is higher than that of running friction.

Classification of Engineering Materials

1. Metals and their alloys, such as iron, steel, copper, aluminum, etc.
2. Non-metals, such as glass, rubber, plastic, etc.

The metals may be further classified as:

(a) Ferrous metals and (b) Non-ferrous metals.

Ferrous metals are those which have the iron as their main constituent, such as cast iron, wrought iron and steel.

The Non-Ferrous metals are those which have a metal other than iron as their main constituent, such as copper, aluminum, brass, tin, zinc, etc.

Factor of Safety

1. The factor of safety is a structure's absolute strength (structural capability) ratio to the actual applied load. FoS measures the reliability of a particular design.
2. A constant required value is imposed by standard specification to which a structure must exceed.
3. **Factor of safety, or required factor of safety.**

   Factor of safety = Ultimate strength/Working stress - for brittle material (concrete)

   Factor of safety = Yield strength/Working stress -for ductile material (steel)

Operation of Lathe Machine :

The various operation of Lathe Machine is performed such as follows:

- Straight Turning
- Rough Turning
- Finish Turning
- Step Turning
- Taper Turning
- Eccentric Turning
- Form Turning
- Facing
- Grooving
- Undercutting
- Knurling
- Relieving
- Drilling
- Reaming
- Boring
- Counter Boring
- Taper Boring
- Grinding
- Milling
- Chamfering
- Thread Cutting
- Tapping
- Parting Off
- Spinning

Straight Turning - The work on a lathe is often machined for two reasons, to cut it to size and to make a perfect diameter. The work which has to be cut in size and its diameter has to be kept the same for the entire length, then straight turning is done on it. This is probably a more general lathe operation. In the straight turning operation, the workpiece is turned straight when it is made to rotate about the lathe axis and the tool is fed parallel to the lathe axis.

Step Turning - When more than one diameter is machined on a shaft, the joining section of each diameter is called a shoulder or step. Step turning is the process of turning which produces different surfaces diameter. The workpiece is held between centers and the tool is moved parallel to the axis of the lathe.

Taper Turning - In a taper turning the operation of the lathe machine is performed in a manner of uniform increasing the diameter of a workpiece or a job along its length.

Facing - Facing is a process in which a flat surface is formed by cutting metal at right angles to the axis of the lathe. The tool should be set such that its cutting face makes an angle of about 2º with the metal surface and must be centered. In facing operation feeding tool is always perpendicular to the axis of the rotation of a job or a workpiece.

Knurling - Knurling is done by pressing the two hardened steel wheels called knurls and the process of impressing the straight indentations on the surface of a workpiece is called knurling. It is widely used for external coarse surfaces of the measurement devices, gauges, and other equipment to easy grip.

Drilling - Drilling in the lathe can be done in the following two ways

1. By rotating the work and feeding the drill into it.
2. By rotating the drill and feeding the work to it.

In this process, the drill bit tool is used for drilling the workpiece.

Reaming

Reaming is a process that consists of the accurate size, round and fine finishing of a hole after the drilling. The tool used for this is called a reamer. Reamer has the cutting edges and is gripped in the drill chuck. Reaming on the lathe is done in exactly the same way as drilling is done. For the reaming at the lathe, the workpiece is rotated at slow speed and reaming is done by tailstock head wheel.

Chamfering

It is performed on the edges of the faces of the outer diameters and bore diameters with a cutting tool to produce beveled edges of limited length.

Tapping

Tapping is the operation of cutting internal threads of small diameter using a cutting tool called a tap.

Parting Off

Parting off is a method in which metal is cut into two pieces using a special cutting tool.